Ethnicraft

Trestle outdoor dining table - concrete top - Dimensions (cm)

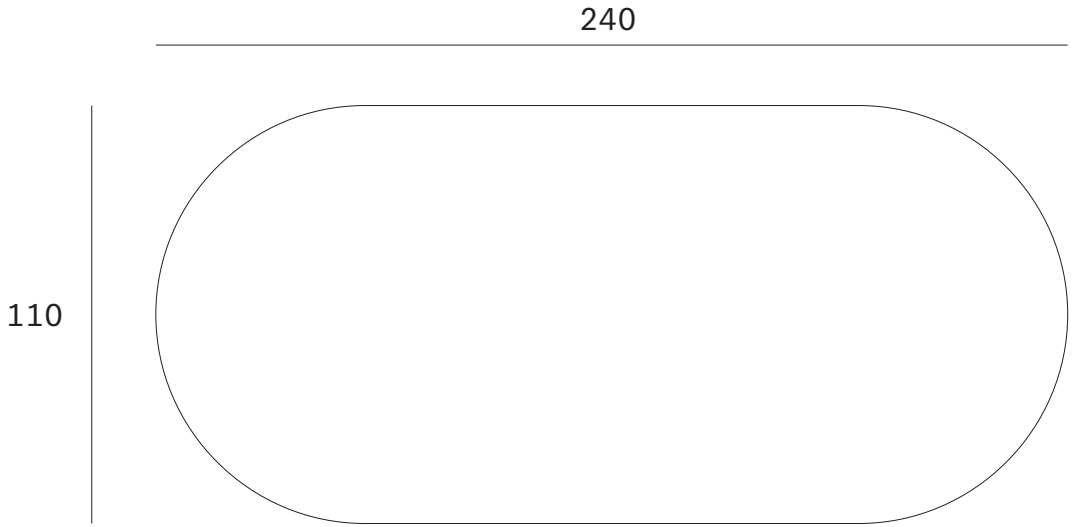

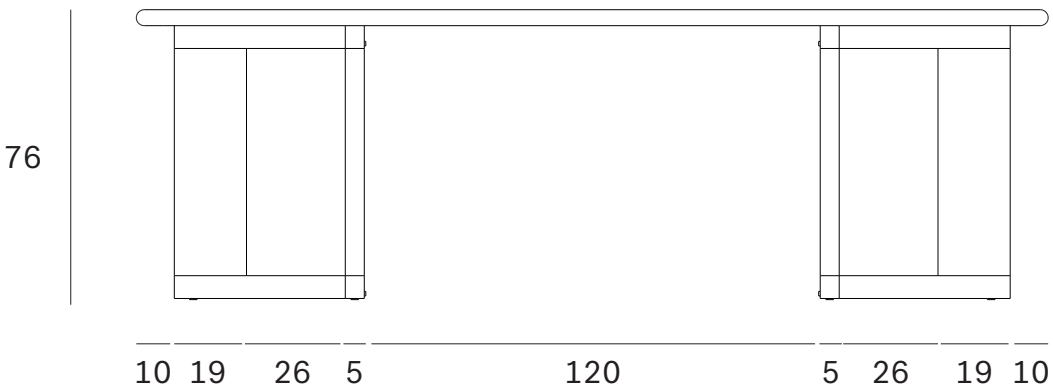

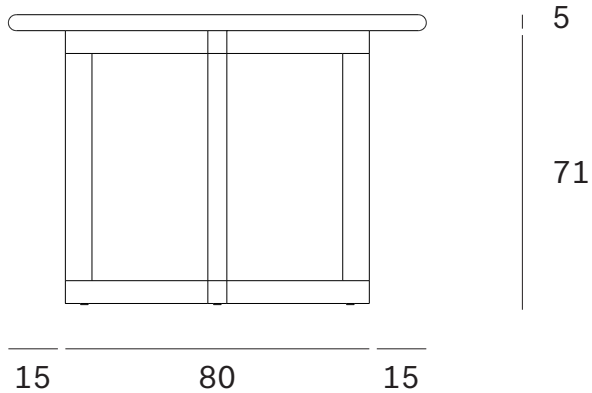

Ethnicraft
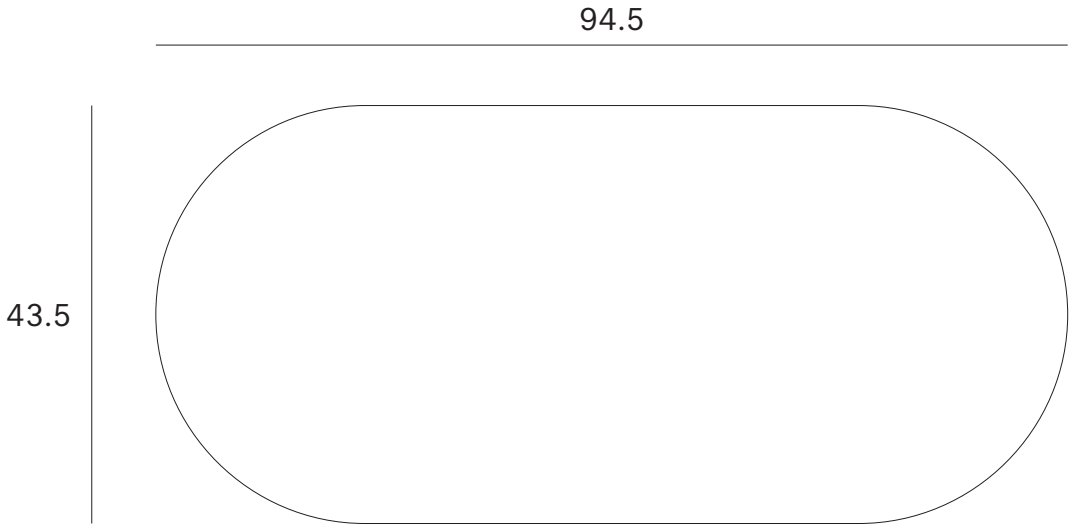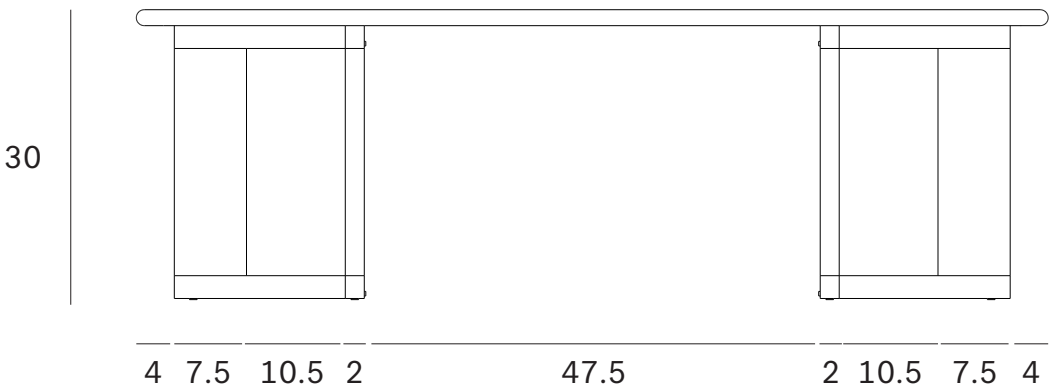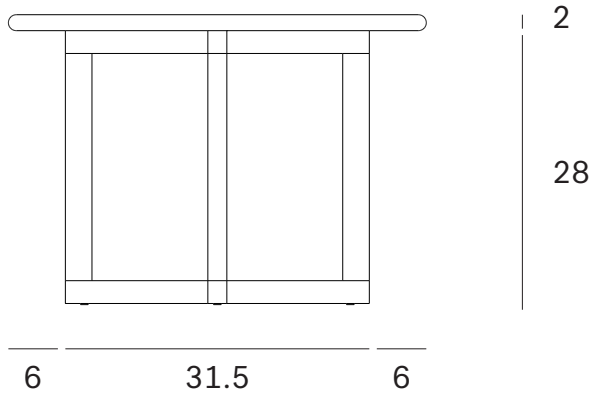
Trestle outdoor dining table - concrete top - Dimensions (inches)