Passage Stool
by Krøyer-Sætter-Lassen

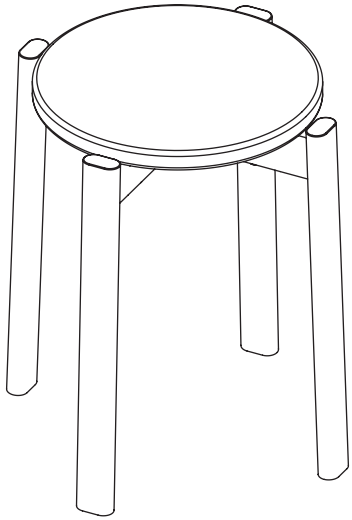

MENU

CONGRATULATIONS

Congratulations with your new stool designed by Krøyer-Sætter-Lassen.
We hope you will enjoy using this item and follow these instructions to ensure correct assembly. These instructions are provided for your safety. It is important that the instructions are read carefully and completely before assembling.

CARE AND MAINTENANCE

Please see care instructions on **www.menuspace.com**

NOTE - Please ensure that all assembly is done on a soft and flat surface, to ensure that the components will not be damaged/scratched.

1

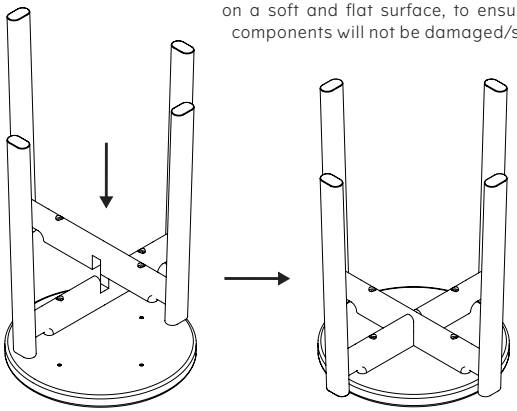

2

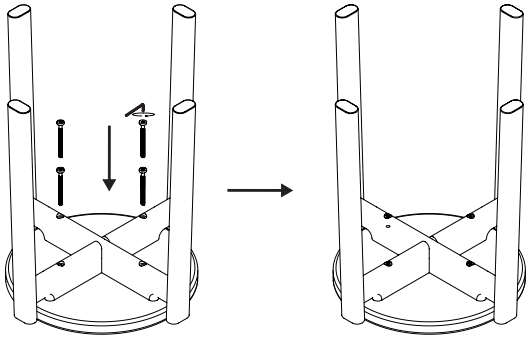
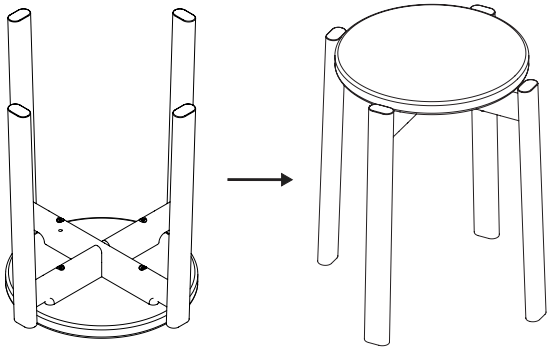
3