Comodín

Santa & Cole Team. 1994
Wall lamp

SANTA & COLE

Comodín cuadrdo

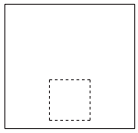

A

Comodín rectangular

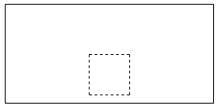

B

A minimalist square or rectangular wall lamp with an arched ribbon or parchment shade that prevents the light source from being directly in view from the side. In the 1980s, Santa & Cole championed the revival of natural materials such as wood, paperboard or ribbons, as an alternative to the cold light of halogen bulbs. The aesthetics put forth challenged the dominant fashion at the time, as it supported a warmer modernity that valued craftsmanship.

Each ribboned shade is handcrafted. In our search for the perfect hues, we collaborated with the studio Raw Color in Eindhoven (Holland) to create new ribbons. Each woven from three distinct yarns that created new colours: terracotta, mustard yellow and forest green. The three basic colours in the ribbon collection, natural white, amber red and black (available since 1994) complete the range of six colours available. The hand-stitched parchment version portrays the way Santa & Cole promotes warm lighting through natural materials.

General description:
Chrome-plated structure.
Shade available in 7 finishes: Stitched beige parchment; natural, red-amber or black ribbon and terracotta, mustard or green Raw Color ribbon.
Suitable for Outlet Box (UL market).

Approximate weight (unpacked):
1 Kg / 2.2 lb

Technical information:
Light source included (CE market):
LED bulb: 4,5 W / 470 lm / 2700K / A^{++} (subject to updates in LED technology).
E27 - E26 / Max. hgt. 105 mm / 4.1” / Max. power 60 W

Compatible with bulbs of the Energy efficiency class (E.E.C): A^{++}... E.
Suitable only for indoor use.
Always use the light source recommended or equivalent.

Input voltage: 100, 120, 230 Vac.
(50 Hz / 60 Hz). According to destination

Comodín

Santa & Cole Team. 1994
Wall lamp

Regulations:

CE
UNE-EN 60598
UNE-EN 55015
UNE-EN 60529

UL
Dry location only
UL-1598
E-353545

Maintenance:

Clean with a smooth cloth. Do not use ammonia, solvents or abrasive cleaning products.

Others:

The lamp is delivered in different packages.
The assembly instructions are delivered with the product.

Model A: Comodín cuadrado

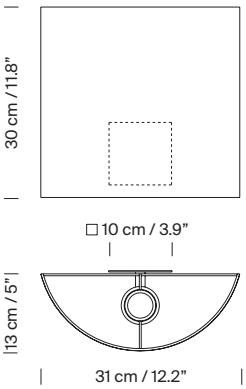
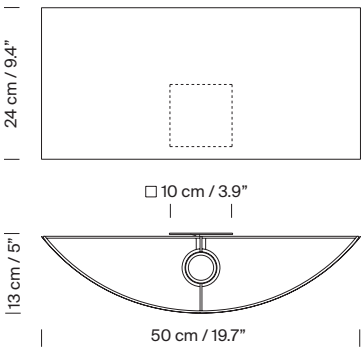
Model B: Comodín rectangular